TBI TRANSFORMER BOBBIN INDUSTRIAL CO.,LTD.
Tel : 86-769-88789999 Fax : 86-769-88789989
http:// tbi-tw.com e-mail : tb6688@ms46.hinet.net

REVISIONS

REV	SYM	DRAFTER	CHECKER	DATE
1		YAN.TANG	G.F.YANG	07/29/09
2		YAN.TANG	G.F.YANG	12/04/09
3				

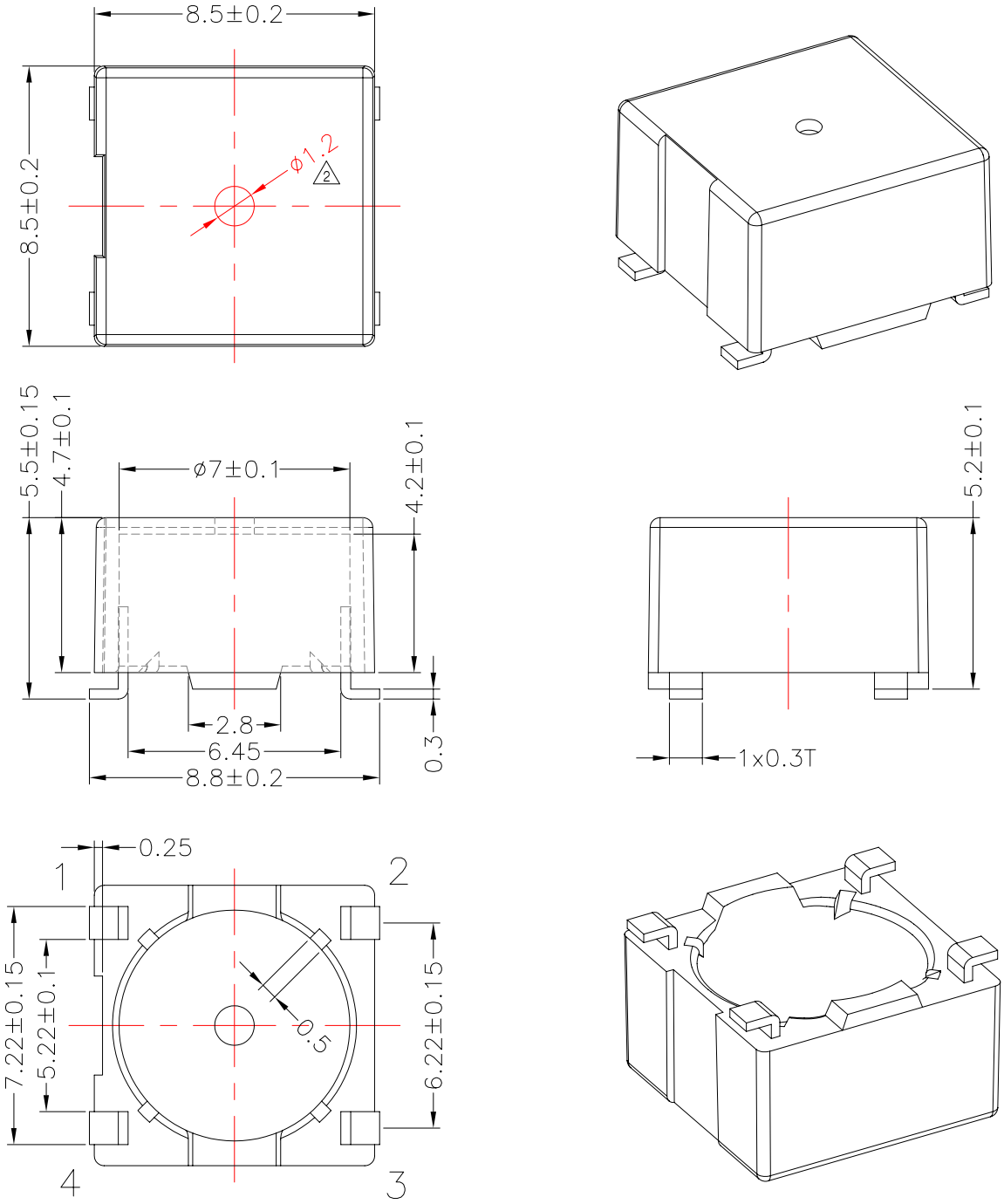

DWG NO.	633T-4P-L-6.22-B-21				
PART NO.	MATERIAL (BOBBIN)	MATERIAL (TERMINAL)	TERMINAL (PLATING)	PIN ALLOCATION	NOTE
TBI-113-34021.2103	AM-113	PB	Sn	ALL PIN	53G633T4PL02

TOLERANCE: .X±0.15 .XX±0.10 .XXX±0.05 | UNIT : m / m | SCALE 5 : 1

Finish:
1. PB wire Immersion Sn on terminal : Thickness:Sn plating,100,5 μm (200 μ inches) min,Base nickel 0.625 μm (25 μ inches) min.
2. CP wire Immersion Sn on terminal : Thickness:Sn plating,100,5 μm (200 μ inches) min.
3. Coplanarity deviation: 0.10 mm (0.004 inches)max.

REV 2